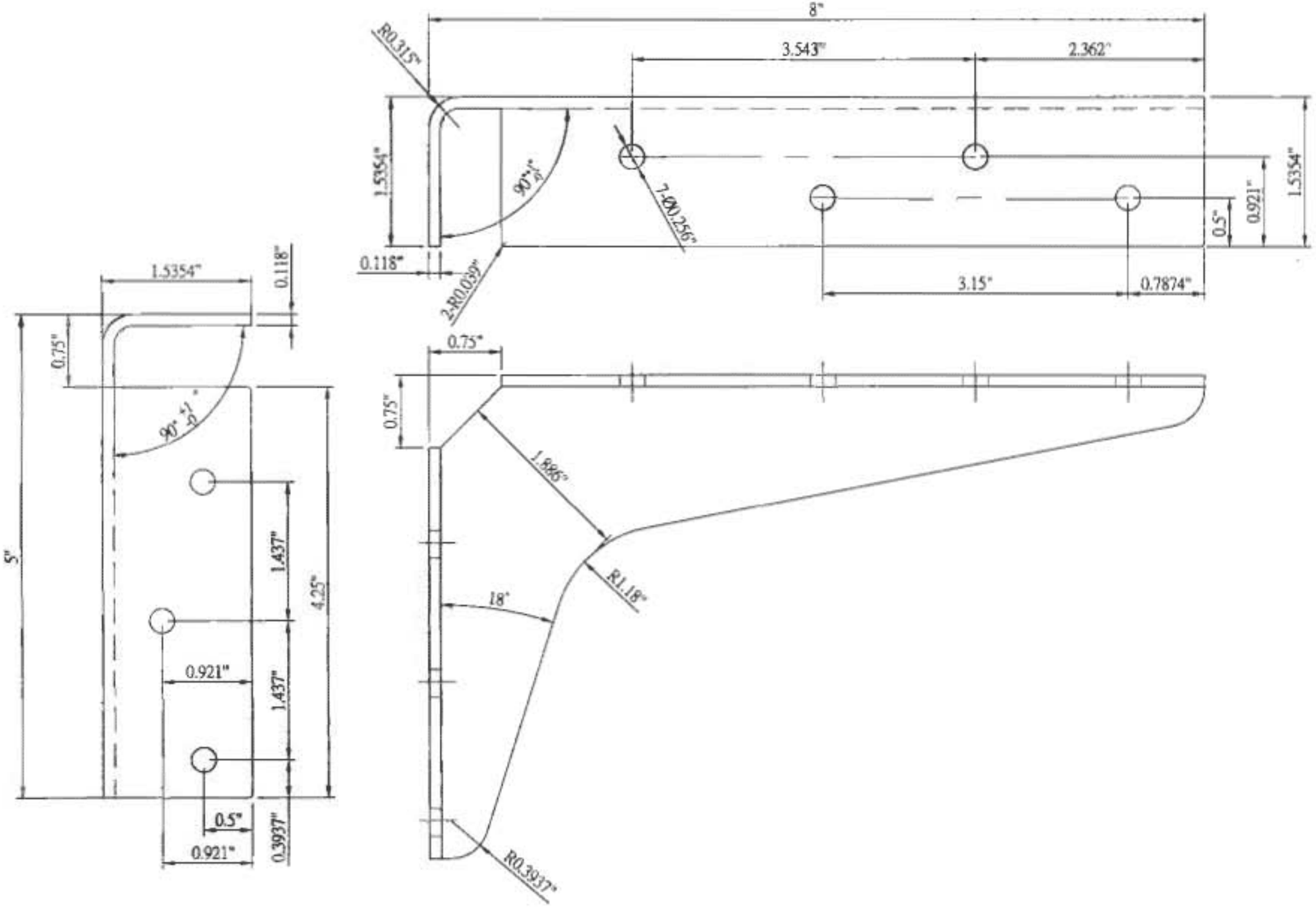
8"
3.543"
2.362"
R0.315"
1.5354"
90°+1°/-0°
7-Ø0.256"
0.118"
2-R0.039"
0.5"
0.921"
1.5354"
3.15"
0.7874"
0.75"
0.75"
1.886"
R1.18"
18°
R0.3937"
1.5354"
0.118"
0.75"
90°+1°/-0°
5"
1.437"
4.25"
0.921"
1.437"
0.5"
0.921"
0.3937"